SEIKO

DIGITAL QUARTZ

Cal. M929A

PARTS LIST

Cal. M929A

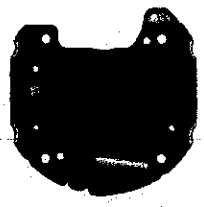

4001 802

4245 802

4270 800

4313 800

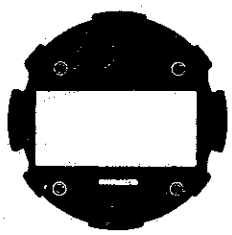

4398 800

☆4510 820

4521 710
4521 711

4530 649

☆SONY EVEREADY 392

T

022 283 2/1

☆⇨Please see remarks on the next page.

Cal. M929A

Characteristics

Casing diameter : ϕ 28.1 mm
Maximum height : 4.5 mm without battery
Frequency of quartz crystal oscillator : 32,768 Hz (Hz = Hertz ..... Cycles per second)
Time display : Digital Display System showing hour, minute, second and day of the week.
Calendar display : Digital Display System showing month, date and day of the week.
Stopwatch display : 12-hour Digital Display System showing hours, minutes and seconds (or minutes, seconds and 1/100 seconds up to 20 minutes measurement).
Counter display : Two counter displays enable to indicate from 1 to 9999 (1 counter) and from 1 to 99 (2 counters).
Display medium : Nematic Liquid Crystal, FE-Mode
Regulation system : Trimmer condenser
Illuminating light : Illuminates all the digital displays in the dark by depressing the light button.
Battery life indicator : All the digits in the display begin flashing.

PART NO.	PART NAME	PART NO.	PART NAME
4001 802	Circuit block		
4245 802	Switch spring		
4270 800	Battery connection		
4313 800	Connector		
4398 800	Liquid crystal panel frame		
☆4510 820	Liquid crystal panel		
4521 710	Reflecting mirror (Silver)		
4521 711	Reflecting mirror (Gold)		
4530 649	Bulb		
022 283	Circuit block screw		
☆SONY EVEREADY 392 ☆Maxell SR41W ☆U.C.C.392 ☆Toshiba WG3	Silver oxide battery		

Remarks :

Liquid crystal panel

☆4510 820 ····· Be sure that the combination between the color of panel and liquid crystal panel should be matched according to the **"SEIKO Quartz Casing Parts List"**.

Battery

☆SONY EVEREADY 392
☆Maxell SR41W
☆U.C.C.392
☆Toshiba WG3
} ····· The applied battery for this calibre might be added the substitutive in the future.
In that case, please refer to separate **"BATTERIES FOR SEIKO QUARTZ WATCHES"**.

☆ ⇨ Please see remarks.
Part numbers in light letters are not shown in photos.

TECHNICAL GUIDE

SEIKO

DIGITAL QUARTZ

CAL. M929A

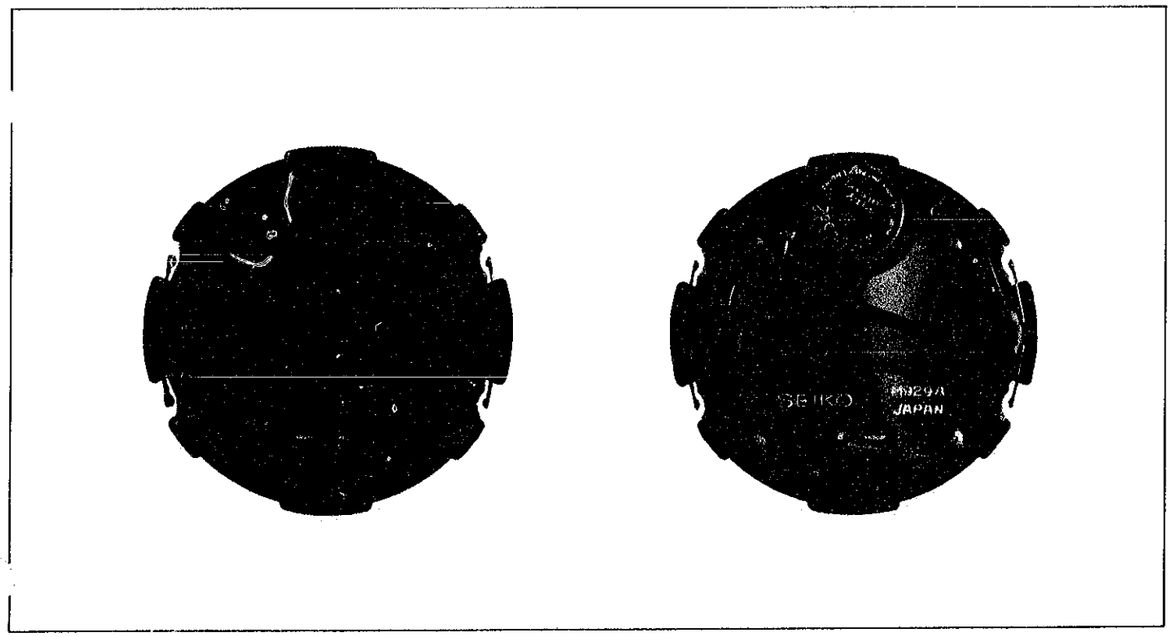

CONTENTS

Display panel side

Case back side

Module

I. SPECIFICATIONS

Item / Cal. No.	M929A
Display medium	Nematic Liquid Crystal, FEM (Field Effect Mode)
Display system	Four-function changeover system with time, stopwatch, counter and time/calendar setting functions. ● Time function: Digital display system showing hour, minute, second and day of the week. In the time function, calendar and elapsing time in the stopwatch function are displayed by depressing a button. Calendar: Digital display system showing month, date and day of the week. ● Stopwatch function: 12-hour digital display system showing hour, minute, second and 1/100 second (The 1/100 second measurement is possible up to 20 minutes.) ● Counter function: Single counter ..... Counting up to 9999 Twin counter ..... Counting up to 99 in two ways ● Time/calendar setting function: Time and calendar can be set to operate at a desired second, minute, hour (with "A" (for A.M.)/"P" (for P.M.) indication), date, month and day of the week.
Additional mechanism	● Battery life indicator (All the digits in the display start flashing when the battery life nears its end.) ● Illuminating light ● Pattern segment checking system
Crystal oscillator	32,768 Hz (Hz = Hertz ..... Cycles per second)
Loss/gain	Loss/gain at normal temperature range Monthly rate: less than 15 seconds (Annual rate: less than 3 minutes)
Casing diameter	ϕ 28.1 mm
Height	4.2mm without battery
Operational temperature range	-10°C ~ $+60^\circ$C (14°F ~ 140°F)
Regulation system	Trimmer condenser
Battery power	Silver oxide battery: SONY EVEREADY 392, U.C.C. 392, Maxell SR41W or Toshiba WG3 Voltage: 1.55V Battery life is approximately 2 years.
IC (Integrated Circuit)	C-MOS-LSI ..... 1 unit

II. DISASSEMBLING, REASSEMBLING AND LUBRICATING

1. Disassembling and reassembling and lubricating of the case

Disassembling procedures Figs.:
① ~ ⑤

Reassembling procedures Figs.:
⑤ ~ ①

Lubricating:
Silicone grease (500,000 c.s.)
Normal quantity
Example: Case No. M929-5000 [A]

Glass portion.

It is not necessary to disassemble the glass except when it is replaced. (See page 4 for handling.)

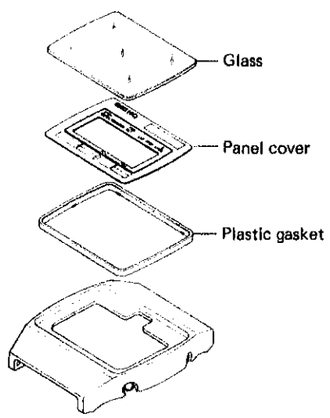

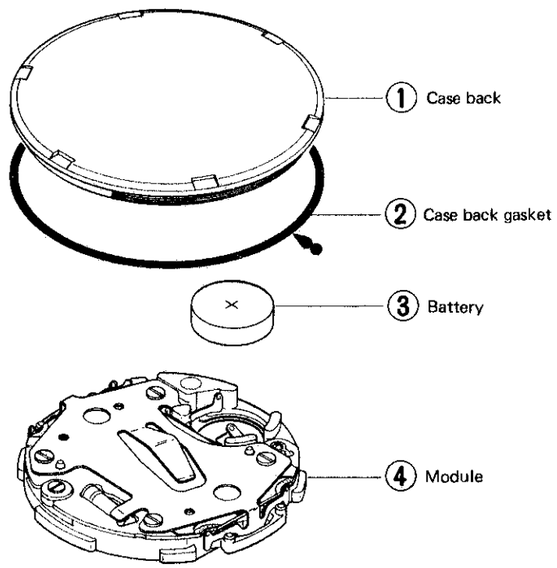

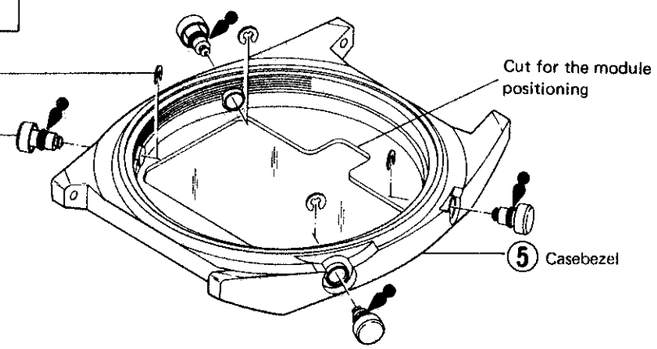

It is not necessary to disassemble the time adjusting buttons and hook-ups for time adjusting buttons (4 assemblies) except when they are required to be replaced.

Remarks for disassembling

④ Module

- Put the tips of the tweezers in a clearance between the liquid crystal panel and the casebezel and pry up the module to take off.

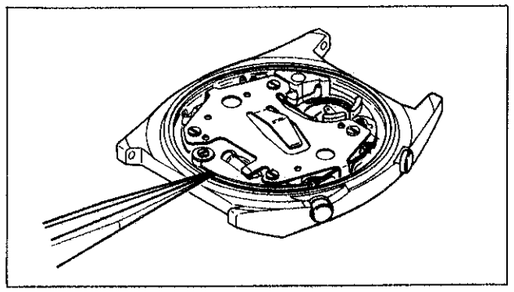

Remarks for reassembling

⑤ Casebezel

- Before reassembling the module, pull out all buttons so that the switch springs do not prevent the module from being reassembled.
  (Push the buttons from inside with the tips of tweezers.)

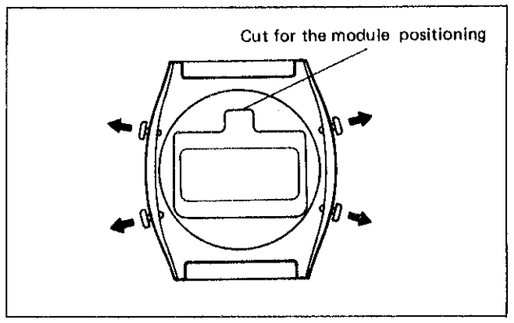

④ Module

- As the liquid crystal panel frame is fixed fast to the casebezel, push in the module with fingers.
- Push it in so that it does not catch the buttons.

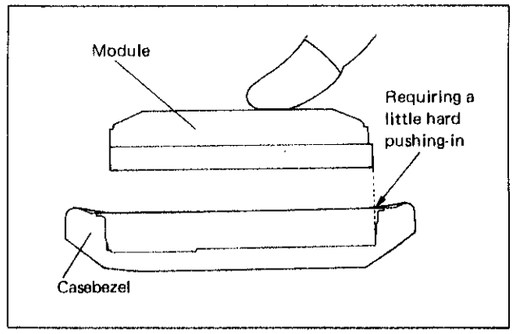

How to replace the glass

(It is not necessary to disassemble the glass except when the glass and the panel cover are replaced.)

- How to disassemble the glass

  - Remove the glass with the SEIKO tightening tool S-220.
    Inserting disk: S-162
    Supporting disk: ϕ34.0 ~ ϕ35.0mm
  - Place a vinyl sheet between the glass and the supporting disk as shown in the illustration on the right.
  - Push only the glass for disassembling with the inserting disk (S-162). Do not push the panel cover.

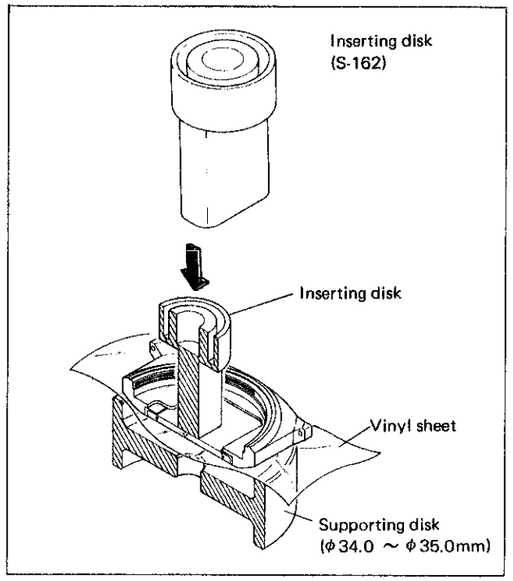

- How to reassemble the glass

(i) Set the plastic gasket.
- Be sure to replace the plastic gasket with a new one.
- Be careful not to mistake the upper side for the lower side.

(ii) Reassemble the panel cover.
- Be sure to set the backside of the panel cover fast to the casebezel.
- Be sure that the space between the casebezel and the edge of the panel cover is uniform in width.

(iii) Place the glass.
- Be careful not to mistake the upper side for the lower side. Place the round side down.

(iv) Push in the glass (by using S-220).
Inserting disk: Plastic inserting disk (S-173)
Supporting disk: ϕ30.5 or ϕ31.0mm

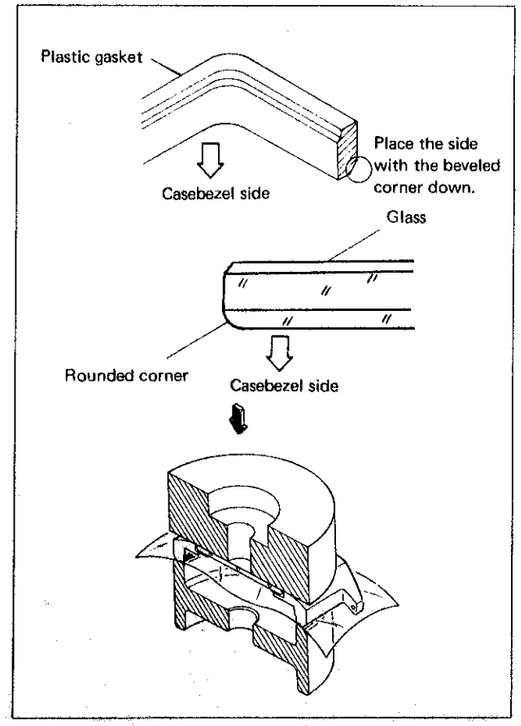

2. Disassembling and reassembling of the module

Disassembling procedures Figs.: ① ~ ⑧
Reassembling procedures Figs.: ⑧ ~ ①

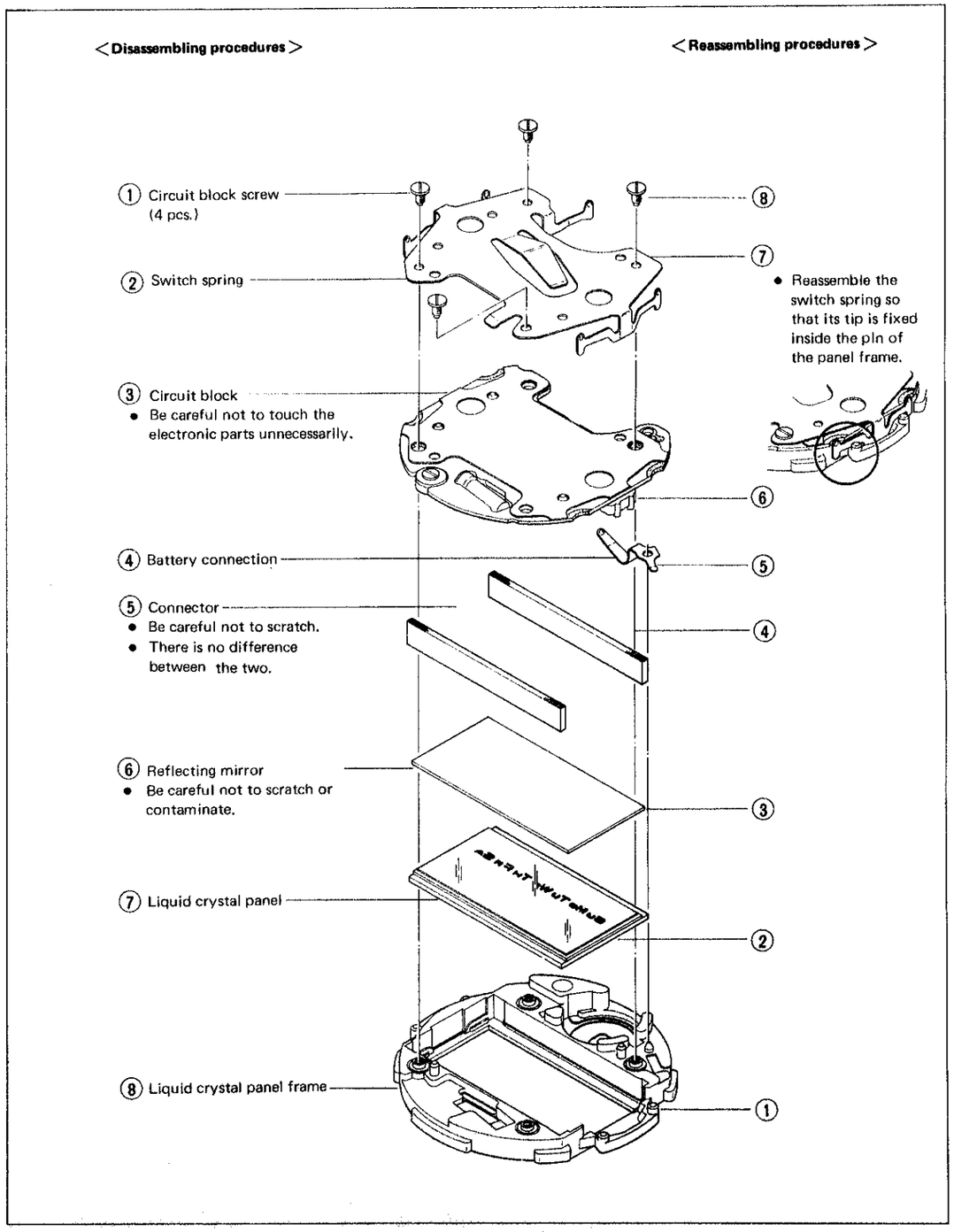

Be sure to use the Static electricity protector (S-830) when handling the module.

1. Guide table for checking and adjustment

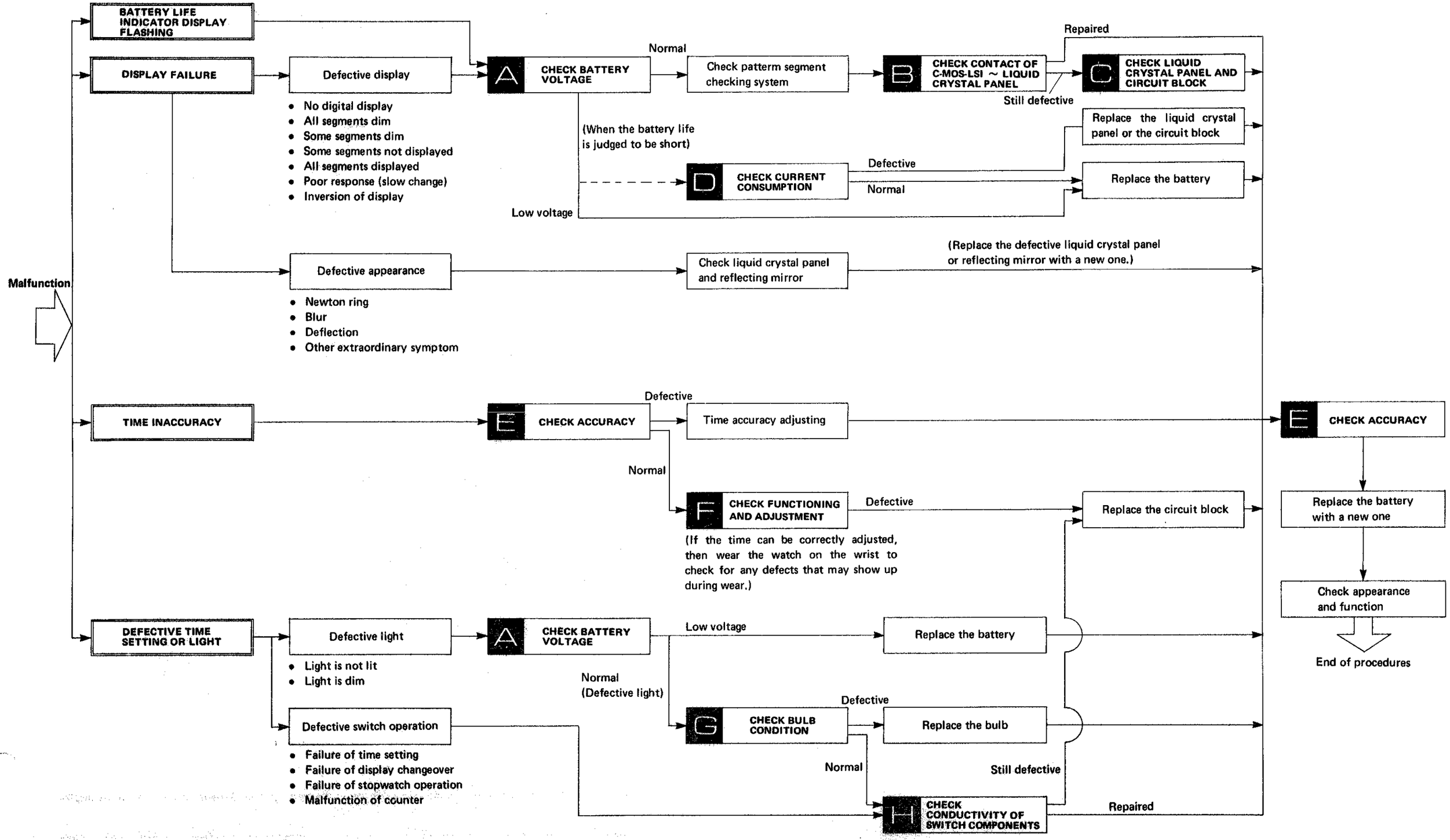

2. Relationship between the segment (Liquid Crystal Panel Electrode) and the C-MOS-LSI output terminal

A complete knowledge of how the segment (Liquid Crystal Panel Electrode) works with the C-MOS-LSI output terminal will provide the proper procedures for checking and adjustment.

- **Designation of segment**

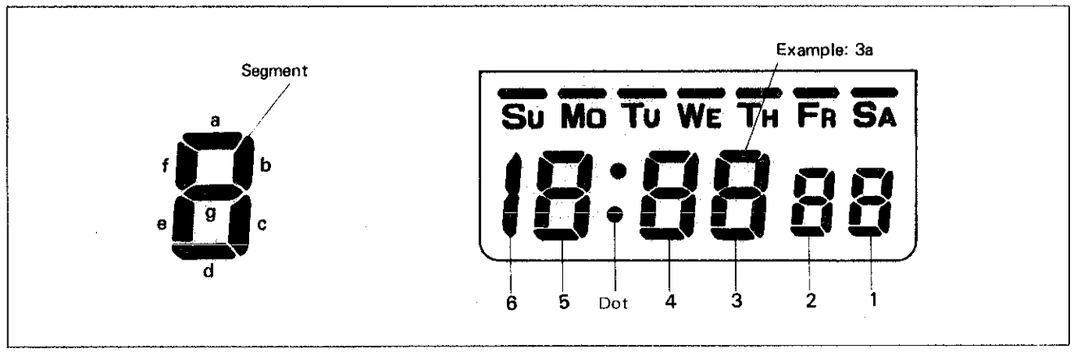

- **Relationship between the segment and the C-MOS-LSI output terminal**

The liquid crystal panel electrode is connected electrically with each segment which forms a digital figure as shown in the illustration of the panel pattern below.
(The panel pattern can be seen if the panel is slightly tilted and looked at in an angular position.) Also, the liquid crystal panel electrode is connected electrically with the C-MOS-LSI output terminal by the connector.

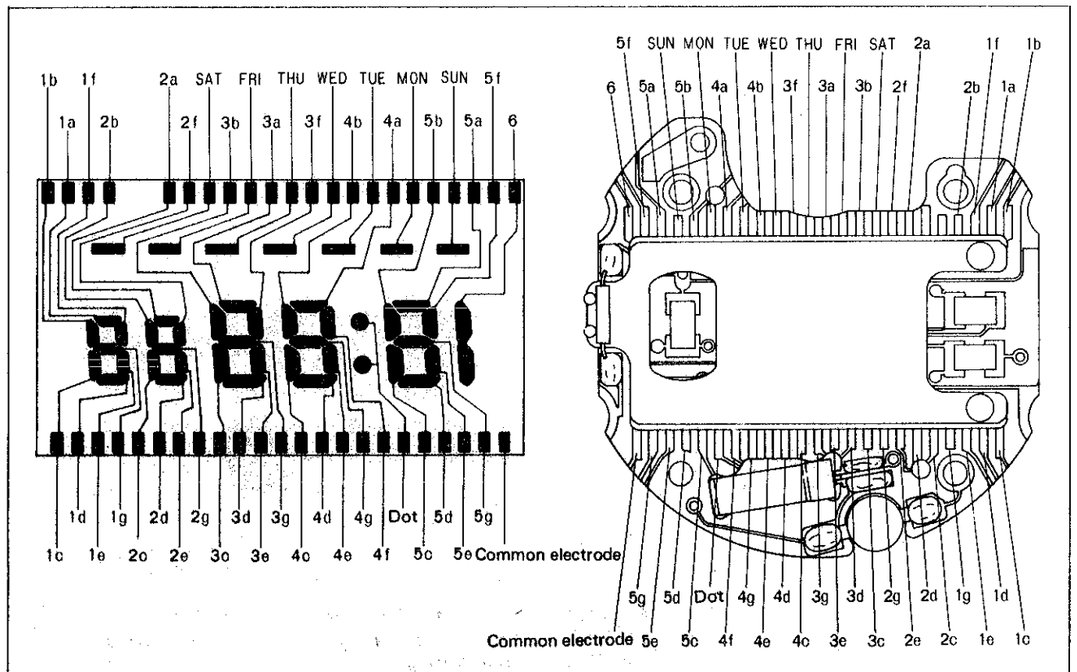

Note: Poor conductivity of the common electrode causes the lighting of all segments or inversion of the display.

3. Procedures for checking and adjustment

	Procedures	Result and repair
A CHECK BATTERY VOLTAGE	Check battery voltage. When there is battery electrolyte leakage, refer to "HOW TO CHECK BATTERY ELECTROLYTE LEAKAGE AND REPAIR" below for repairing.	More than 1.5V . . . Normal Less than 1.5V . . . Defective

HOW TO CHECK BATTERY ELECTROLYTE LEAKAGE AND REPAIR

(1) Remove the module from the case.

(2) Disassemble the module.

(3) Wipe off battery electrolyte on the circuit block.

1. Wipe off battery electrolyte with a cloth moistened with distilled water. (If distilled water is not available, use tap water.)

> *Note:*
> - Do not expose the trimmer condenser to water or alcohol, and if it is exposed, there may be a change in the condenser capacity and eventually in the time accuracy.
> - Do not use a cloth which gives off lint, such as gauze, flannel, etc.

○ When the circuit block is cleaned, be sure to clean the connecting portions.

Connecting portions

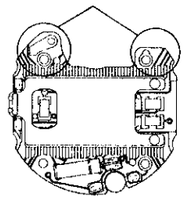

If the circuit block is badly contaminated with battery electrolyte, replace the battery connection, circuit block or switch spring with a new one.
(Example: When the printed circuit of circuit block is rusted.)

2. Rinse with alcohol.
(If the cleaned portions remain wet with water, they will corrode with rust.)

3. Dry with warm air by using a dryer.

(4) Clean the other parts (switch spring, liquid crystal panel frame, battery connection, etc.)

1. Wipe off battery electrolyte on each part with a soft brush moistened with distilled water.
(If distilled water is not available, use tap water.)

2. Rinse with alcohol.

3. Dry with warm air by using a dryer.

(5) Reassemble the module.

Replace the battery with a new one.

(6) Check to see if the time and calendar function, the stopwatch function, the calendar function and the current consumption are normal.

	Procedures	Result and repair
CHECK PATTERN SEGMENT CHECKING SYSTEM	If some segments are dead or dim, set the mode for the time and calendar setting function. Then depress buttons Ⓑ and Ⓒ together to find defective segments. (If there is no defective segment all segments light up.) 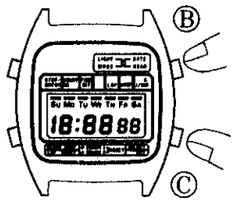 	Proceed to B.
B CHECK CONTACT OF C-MOS-LSI ~ LIQUID CRYSTAL PANEL	After removing the liquid crystal panel, check for poor conductivity of the liquid crystal panel, connector and C-MOS-LSI output terminal whose segments are found to be defective in "CHECK PATTERN SEGMENT CHECKING SYSTEM." (Refer to the "Relationship between the segment and the C-MOS-LSI output terminal" on page 8. Use a microscope for checking. (1) Check for dust, lint and other contamination on the connector and liquid crystal panel electrode. Be sure to check the connecting portion of the liquid crystal panel and the circuit block (A) carefully. 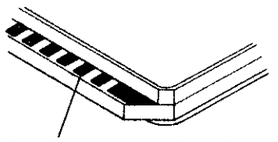 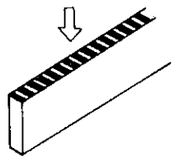	Uncontaminated: Normal Proceed to B (2). Contaminated: Defective Wipe off any foreign matter.
	(2) Check for any scratch, crack and break of the connector and the liquid crystal panel. 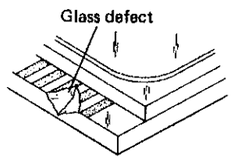 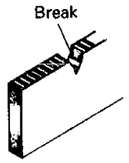 	No contamination, scratch, crack or break: Normal Proceed to B (3). Scratched, cracked or broken: Defective Replace the connector or liquid crystal panel with a new one.
	(3) Check for dust, lint and other contamination on the output terminal of the circuit block. 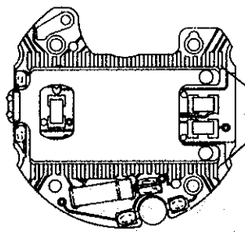 	Uncontaminated: Normal Proceed to C. Contaminated: Defective Wipe off any foreign matter.

	Procedures	Result and repair
C CHECK LIQUID CRYSTAL PANEL AND CIRCUIT BLOCK	Check to see if the liquid crystal panel and the circuit block function correctly. (Refer to the "Relationship between the segment and the C-MOS-LSI output terminal" on page 8.) (1) Check liquid crystal panel. 1. Set up the volt-ohm-meter. Range to be used: OHMS R x 1 ~ R x 1K *Note:* Any range will do if more than 3V is applied to the terminal of the volt-ohm-meter. When the volt-ohm-meter other than the SEIKO volt-ohm-meter S-831 is used, all segments may not be lit. If any segment does not light, change the range to the one (R x 10K) which is higher in resistance than R x 1K. 2. Remove the liquid crystal panel from the module and turn it upside down. 3. Measuring (Check to see if the corresponding segment lights up.) 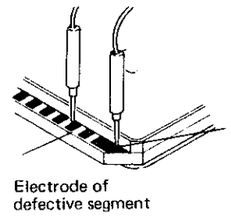 *Note*: Either red or black probe will do. 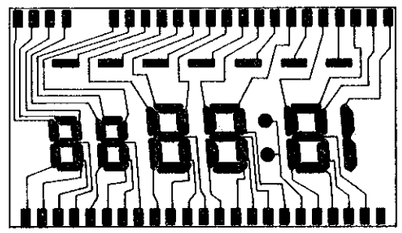	Lights up: Normal Proceed to C (2). Does not light up or more than two segments light up: Defective Replace the liquid crystal panel with a new one.
	(2) Check the circuit block output voltage. 1. Set up the volt-ohm-meter. Range to be used: DC 3V 2. Place the module on the bench. Attach the current supplier (S-833) to the circuit block. Clip (+): Connecting portion of the circuit block screw shown in the illustration Clip (−): Connecting portion of the battery connection 3. Measuring Probe Red (+): Connecting portion of the circuit block screw of the circuit block shown in the illustration. Probe Black (−): Each portion of the output terminal of the C-MOS-LSI 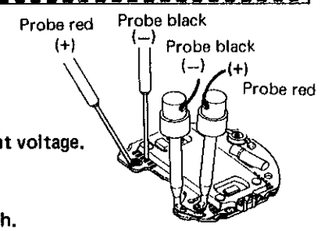 	More than 0.8V: Normal Return to B. Less than 0.8V: Defective Replace the circuit block with a new one.

	Procedures	Result and repair
D CHECK CURRENT CONSUMPTION	(1) Check to see if the current consumption is normal. (Can be checked no matter which function the watch may be performing.) ● **Set up the volt-ohm-meter.** Range to be used: DC12μA (DC 0.03mA)* Use the current supplier (S-833) and connect as shown in the illustration below. 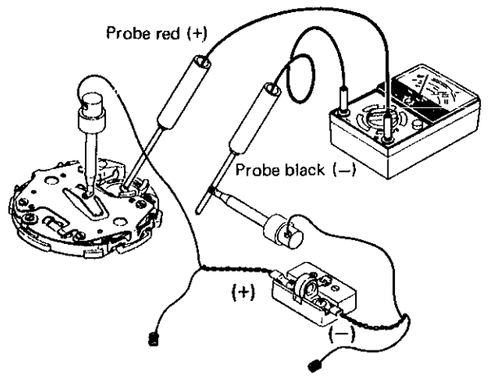 	*Note: If the pointer of the volt-ohm-meter swings over the maximum value when DC 12μA (DC 0.03mA) is used, change the range to a greater one where the pointer does not run over the maximum value while applying the probes to the respective portions. Then, after two or three seconds, return the range to DC 12μA (DC 0.03mA) again for measuring. Less than 2.5μA: Normal Replace the battery with a new one. More than 2.5μA: Defective Proceed to D (2).
	● **Micro Test MT-10 II*.** 1 Power switch . . . ON 2 Polarity changeover button: + 3 Current consumption/ Voltage indication button: μA 4 Voltage selection button: 1.55V Probe Black (−): Battery connection Clip Red (+): Switch spring 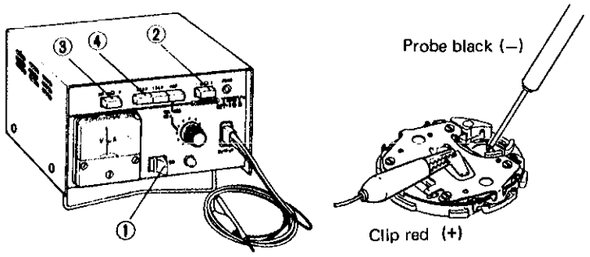 	*Note: If the pointer of the Micro Test MT-10II swings over the maximum value while the current consumption is measured, depress the Current consumption/Voltage indication button (3) so that it is released to indicate the voltage (⎓V) while the black probe and the red clip are applied. Then, after two or three seconds, depress the Current consumption/Voltage indication button again so that it holds in the pushed in position (μA⎓) to indicate the current consumption for measuring.

	Procedures	Result and repair
D CHECK CURRENT CONSUMPTION	(2) Disassemble the liquid crystal panel, and check to see if the current consumption is normal. Follow the procedures in D (1).	Normal: Replace the liquid crystal panel with a new one. Defective: Replace the circuit block with a new one.
E CHECK ACCURACY	Check gain and loss of time. 1. Set up the Quartz Tester. 2. Measuring 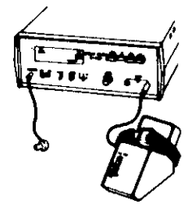	Does not lose or gain: Normal Proceed to the following procedure. Loses or gains: Defective Proceed to Time accuracy adjusting. Time accuracy is adjusted by turning the trimmer condenser.
F CHECK FUNCTIONING AND ADJUSTMENT	Check to see if the watch functions correctly and can be adjusted by the button operation. 1. Check the stopwatch function. ● Check to see if "start", "stop", "lap release" and "reset" function correctly. 2. Check the counter function. ● Check to see if seconds can be counted correctly or can be reset to "00" second. 3. Check the time and calendar setting function. ● Set the time and calendar digits more than one cycle for each unit and check to see if each digit is advancing correctly.	Functions correctly and can be adjusted: Normal Wear the watch on the wrist to check time accuracy. Does not function correctly or cannot be adjusted: Defective Proceed to Replace the circuit block.

	Procedures	Result and repair
G	(1) Check to see if the bulb lead terminals touch the lead terminal of the circuit block. 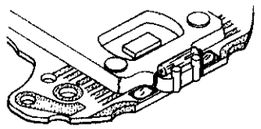	No exfoliation of solder: Normal Proceed to G (2). Exfoliation of solder: Defective Re-solder the foot of the bulb. Refer to "HOW TO REPLACE THE BULB" on page 15 for re-soldering.
CHECK BULB CONDITION	(2) Check to see if there is a broken filament in the bulb. 1. Set up the volt-ohm-meter. Range to be used: OHMS R x 1	
	2. Measuring Apply the two probes of the volt-ohm-meter to the bulb lead terminal as shown in the illustration. 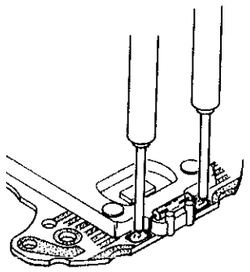 **Note:** Either red or black probe will do.	Lights up: Normal Proceed to H. Does not light up: Defective Replace the bulb with a new one. Refer to "HOW TO REPLACE THE BULB" on page 15 for replacing the bulb with a new one.

	Procedures
HOW TO REPLACE THE BULB	Use the soldering iron with a thin and sharp tip, which has small heat capacity. Thickness of tip: Approx. ϕ1.0 mm Heat capacity: Power consumption 5W ~ 20W
	(1) Remove the defective bulb. Hold the defective bulb by tweezers and pull it up slightly. Then, put the tip of the soldering iron on the bulb terminal and remove the bulb. 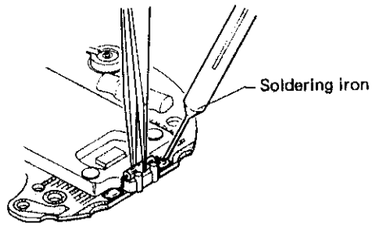
	(2) Check to see if the new bulb is normal. Follow the procedures mentioned on page 14 for checking.
	(3) Solder the feet of the bulb on the pin side of the circuit board. Be careful not to make the feet slack when soldering. Fix the bulb on the pin side of the circuit board by a cellophane tape and it makes it easier to solder the bulb. 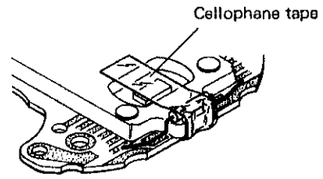
	(4) As the foot of the bulb is long, cut it by nippers after it is soldered.
	Remarks: (1) Be careful not to put the tip of the soldering iron long time or the circuit block may be damaged. Take off the soldering iron from the connecting portion when solder becomes even on the circuit board. (Approx. 1 second.) (2) Be careful not to touch the reflecting mirror spacer (made of plastic) with the soldering iron.
	Correct 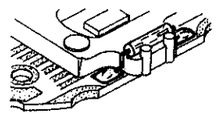 Excessive 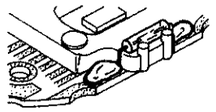 Insufficient 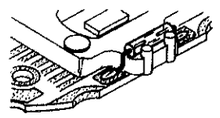
	(5) Check the bulb condition again.

CHECK CONDUCTIVITY OF SWITCH COMPONENTS

	Procedures	Result and repair
H	Check to see if the switch spring functions correctly. (1) Check to see if the switch springs (four arrow-marked portions shown in the illustration below) function correctly when they are pushed in. 1. Check to see if the four arrow-marked springs touch the switch terminals of the circuit block when they are pushed in with the tips of tweezers and that they do not touch the switch terminals of the circuit block when released. 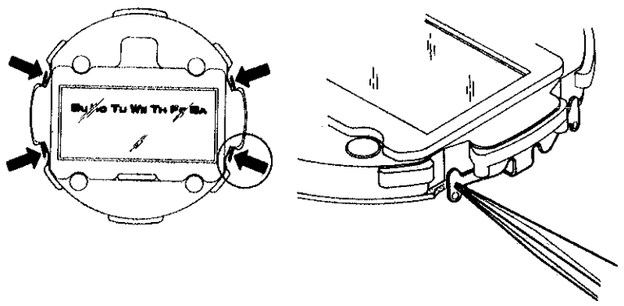 2. Check for dust, lint and other contamination on the contacting portions.	Functions correctly: Normal Does not function correctly: Defective If the switch springs do not function correctly after they are adjusted, replace them with new ones. No dust, lint or uncontaminated: Normal Proceed to H (2). Dust, lint or contaminated: Defective Wipe off any foreign matter.

All procedures of Disassembling, Reassembling, Checking and Adjustment are completed.